FLINDERS RANGES HERITAGE SURVEY

Bolla Bollana Brick Kiln and Copper Ruins UNM–SR–01

LOCATION

Pastoral Station	Balcanoona, Gammon Ranges National Park
Owner(s)/Lessee(s)	National Parks and Wildlife Service
Local Government Area	Unincorporated
AMG Reference	Copley SH 54–9 UM3447

State Heritage Status	State Heritage Register — 10317 — 28 May 1981
Other Assessments	Register of the National Estate National Trust Classified List — 1231

Photograph	State Heritage Branch

Bolla Bollana Brick Kiln and Copper Ruins

DESCRIPTION

Round brick structure of the charcoal kiln and ruins of smelters, flue, a cottage and grave are all that remain on the site.

HISTORY

Including Heritage Branch Report: Jack E. Connell

The unusual Bolla Bollana round brick built charcoal kiln is all that remains intact on this site inside the Gammon Ranges National Park which is a popular tourist site. Also on site are the ruins of smelters, flue, a cottage and the grave of T. Cornelius, a manager of the Bolla Bollana smelter who died on 2 July 1874. The site is close to Stanley and Daly copper mines, which started around 1862. As with many mines in remote and marginal regions, the history of their fortunes really depended on transport and water (either too much water in the mines or not enough on the surface).

When the Stanley Mine started it was said 'the lode traversing this lease being the Champion Lode of the district and ... the richest lode yet discovered in the north'. In 1872, several of the mines in the area, inlcuding Stanley Mine, were sold to a Ballarat company.

Soon after, Bolla Bollana was chosen as a site for a smelting works, comprising of two furnaces and a brick kiln to be built to serve the individual mines in the area. The site was chosen because of a nearby creek, fire-clay and timber in which to fire the smelters. They were completed by October 1873. Because the smelters needed about twenty men to operate them, a store was set up by a former policeman to service their needs.

For a year the smelters operated but the cost of transportation was so heavy that the smelters stopped. The mines in the vicinity owned by the South Australian and Victorian Copper and Bismut Mining and Smelting Co. sold out to another Ballarat company, the Bolla Bollana South Australian Mining and Smelting Company, in Janaury 1875. The new company imported a staff of both Chinese and Europeans to work their new mines, and smelters and operations commenced for a short time.

Unfortunately the firestone in the smelters was unable to withstand excessive heat and began crumbling. By 1881 the Bolla Bollana company ceased operating. In 1885 the smelters were again fired up briefly, this time by the Port Augusta Smelting and Mining Company, but once more the old problems of isolation and distance took their toll on capital. A report in the *Advertiser* of June 1899 noted:

> The old Bolla Bollina smelting works, erected by Mr. A. Frost, were operated between 1880 and 1890, on ore from the Sir Dominick, the Stanley, the Welcome, and Donoughue's Castle mines. Since the smelting works stopped and the mines ceased working Mr. Frost pulled up the beds of the furnaces and got six or eight tons of copper out of them and the richest of the slag, but Mr. Greenwood states that there are now about 300 tons of slag, which will average 10 or 15 per cent., and from 5 to 6 dwt. of gold to the ton, according to an assay by Mr. E.W. Hawker, M.A. Only wood fuel was used, so that the

Bolla Bollana Brick Kiln and Copper Ruins

smelting was imperfectly done. The buildings, sheds, and fittings are still standing on the south bank of the main water creek, where there is abundance of wood and water. The creek empties into Lake Frome, and on the east side of the range is the Arkaroola Creek. In the vicinity of the smelting works in small creeks alluvial gold has been found and nodules of native bismuth.

In 1910 the whole site was stripped and dismantled by the Union Copper Company for material to be installed into its own mine and smelters at Yudanamutana.

Jack Connell states that there are two other round houses of similar size and appearance in South Australia. They are the Bremer powder magazine at Callington and the Talisker mine brick kiln, near Cape Jervis. There are also ruins of a similar structure at Parham Road, Eden Hills.

STATEMENT OF HERITAGE VALUE

Few smelters were built in the Flinders Ranges and the round brick kiln appears to be the only known example in the the region. Bolla Bollana was entered in the State Heritage Register on 28 May 1981.

RELEVANT CRITERIA

(a) it demonstrates important aspects of the evolution or pattern of the State's history, namely that of mining where Chinese and Europeans were brought into the area to work the mine;

(b) it has rare, uncommon or endangered qualities that are of cultural significance given that few smelters were built in the Flinders Ranges and the brick kiln appears to be the only known example in the area and one of few similar kilns remaining in the State;

(g) it has a special association with the work of the Bolla Bollana South Australian Mining and Smelting Company.

REFERENCES

Advertiser, 21 June 1899 (quote).
Department of Environment and Natural Resources, State Heritage Branch — 10317.
Klaassen, N., *The Northern Flinders Ranges: Mountains, Minerals and Mines 1850–1920*, Nic Klaassen, Adelaide, 1991. See Chapter 10, Bolla Bollana, pp. 203–22.
Mincham, H., *The Story of the Flinders Ranges*, Rigby, Adelaide, 1983, pp. 133–35, 240.

Prepared by P. Sumerling **Date** June 1995

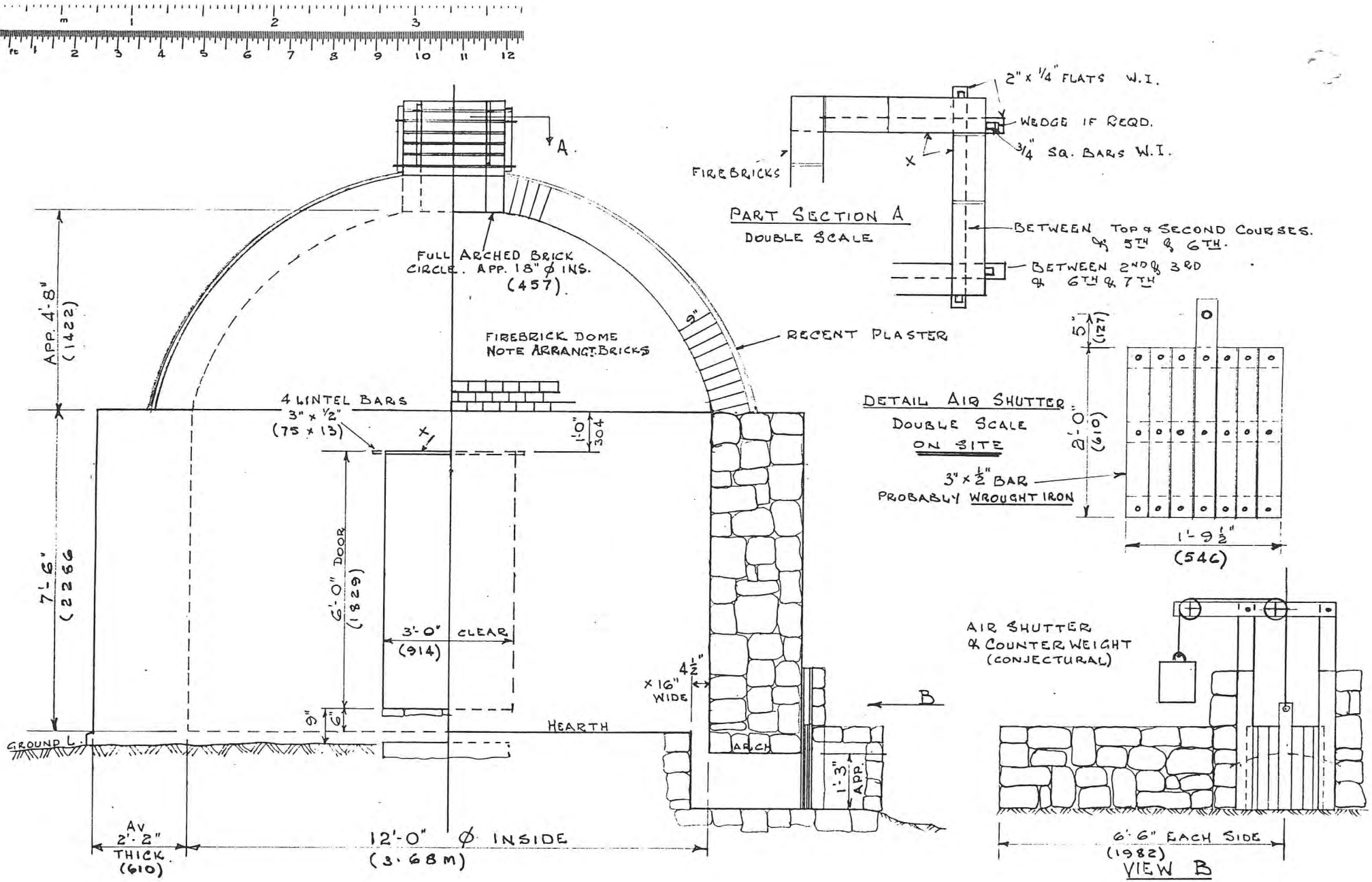

N.B. WROUGHT IRON AT POINTS X EXPOSED TO FIRE

DETAILS FROM SITE 14.5.87.

State Heritage Branch	55 Grenfell Street, Adelaide, South Australia 5000	DRAWN BY J. E. CONNELL	DATE 16.5.87.
TITLE BOLLA BALLANA - CHARCOAL KILN.		DRG. No.: BB1	

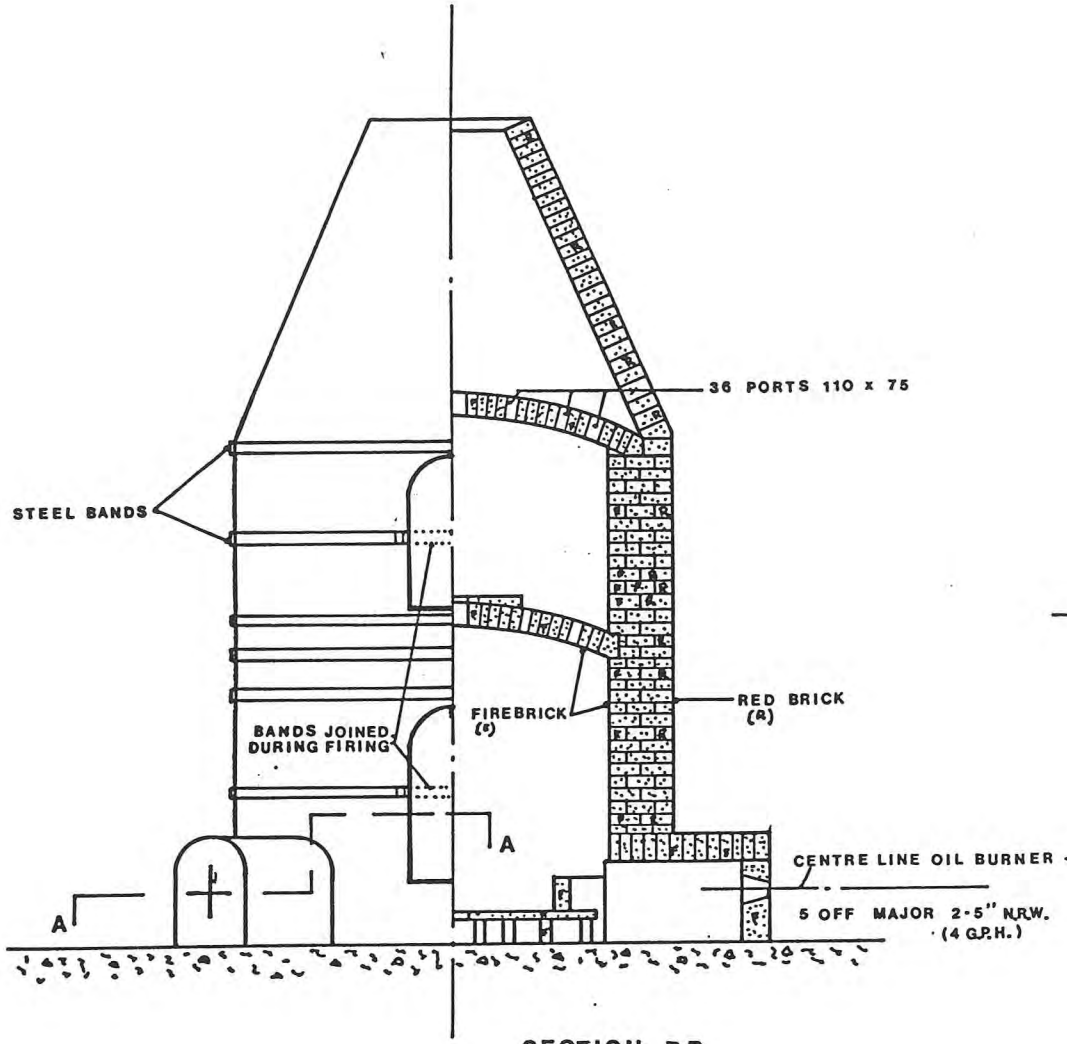

SECTION BB

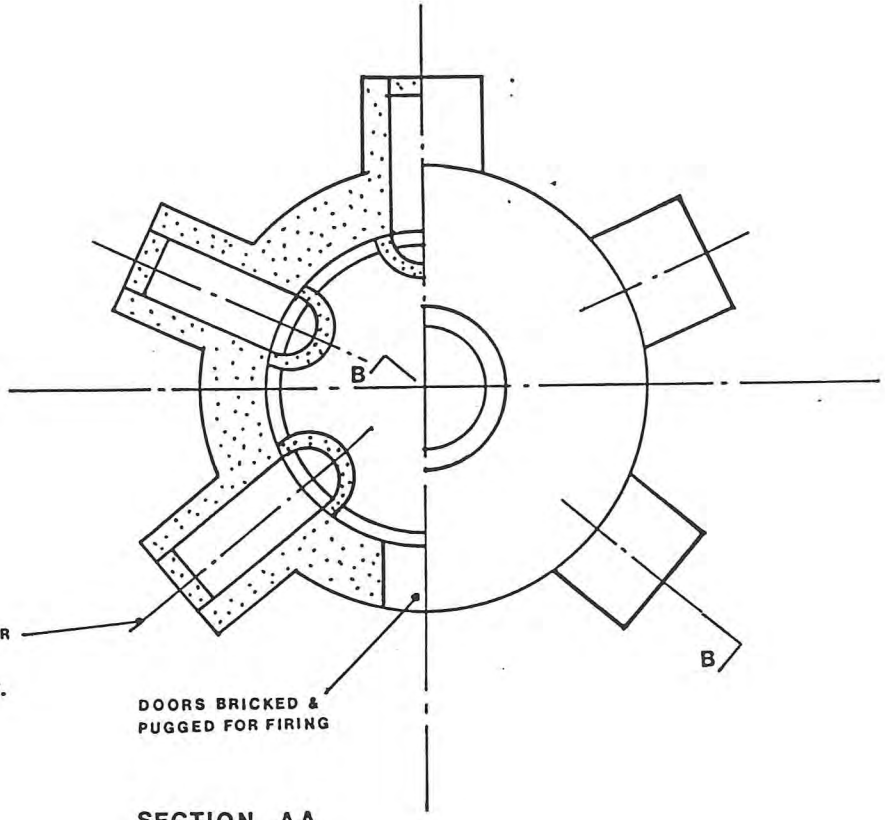

SECTION AA

Typical of 3 kilns

Upper door opposite (2 kilns)

Scale 1:50

AUSTRALIAN HERITAGE ENGINEERING RECORD A.H.R. UNIT, DEPT. FOR ENVIR. S.A. STUDENT VOLUNTEER SCHEME	NAME OF STRUCTURE BOTTLE KILN KOSTER'S PREMIER POTTERY. TRINITY GARDENS S.A.	SURVEY No. DWG. No.	MAP TITLE ADELAIDE 6628-III SCALE 1 : 50,000 GRID REFERENCE 340-846 LOCAL GOVT. AREA PAYNEHAM	MEASURED DRAWN J.E. Bonnell. CHECKED DATE 14·10·80

FILM 76 NO 10 VIEW OVER SMELTER RUINS AND BRICK KILN FROM EAST BOLLA BOLLANA 8-3-79

FILM 76 NO 8 — SMELTING TUNNEL AND RUINS FROM SOUTH — 6736-10317 — BOLLA BOLLANA 8-3-79

FILM 76 NO 8 — SMELTING TUNNEL AND RUINS FROM SOUTH — BOLLA BOLLANA 8-3-79

FILM 76
No 5

INTERIOR DETAIL OF FLUE OF KILN
AT SMELTERS

BOLLA BOLLANA
8-3-79

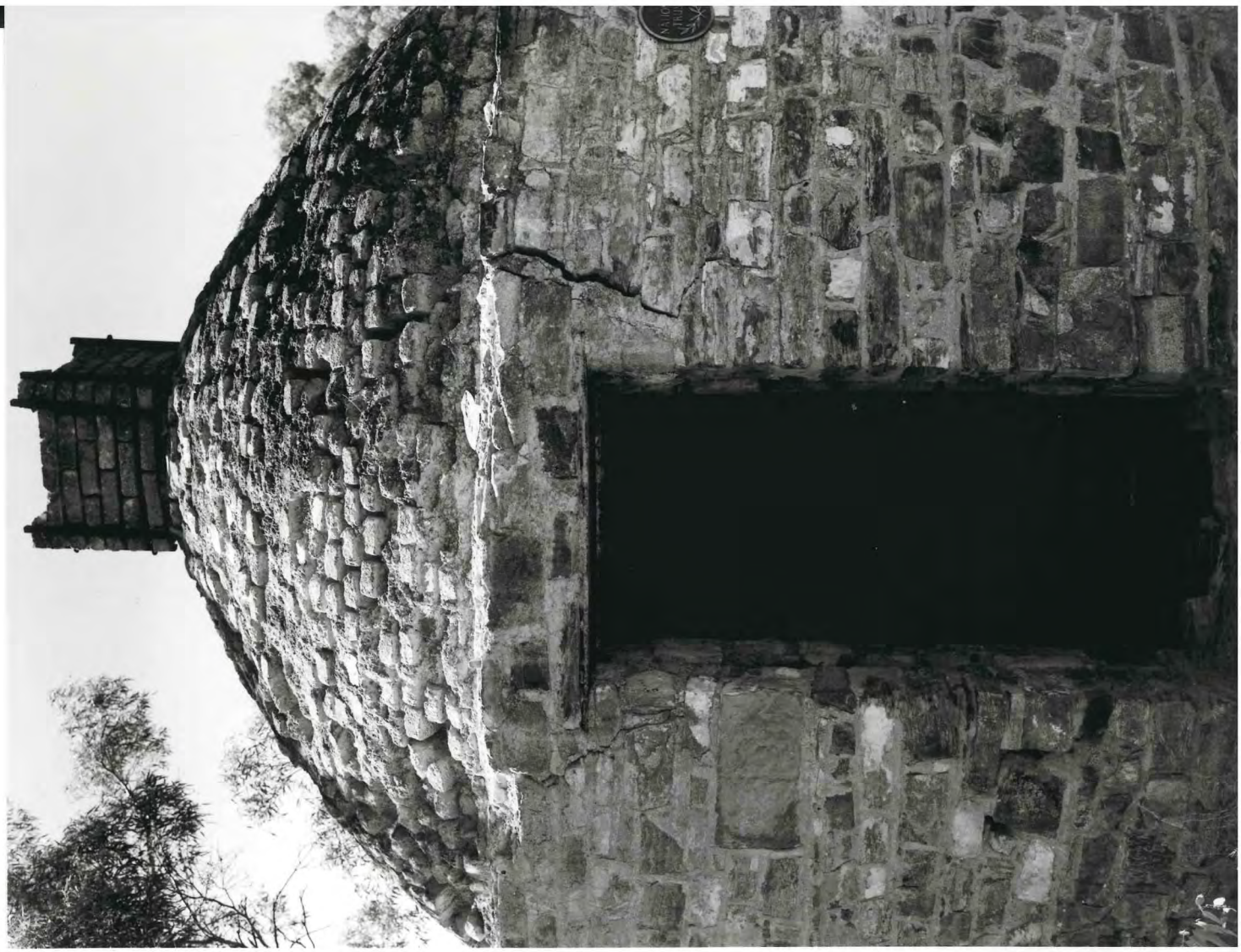
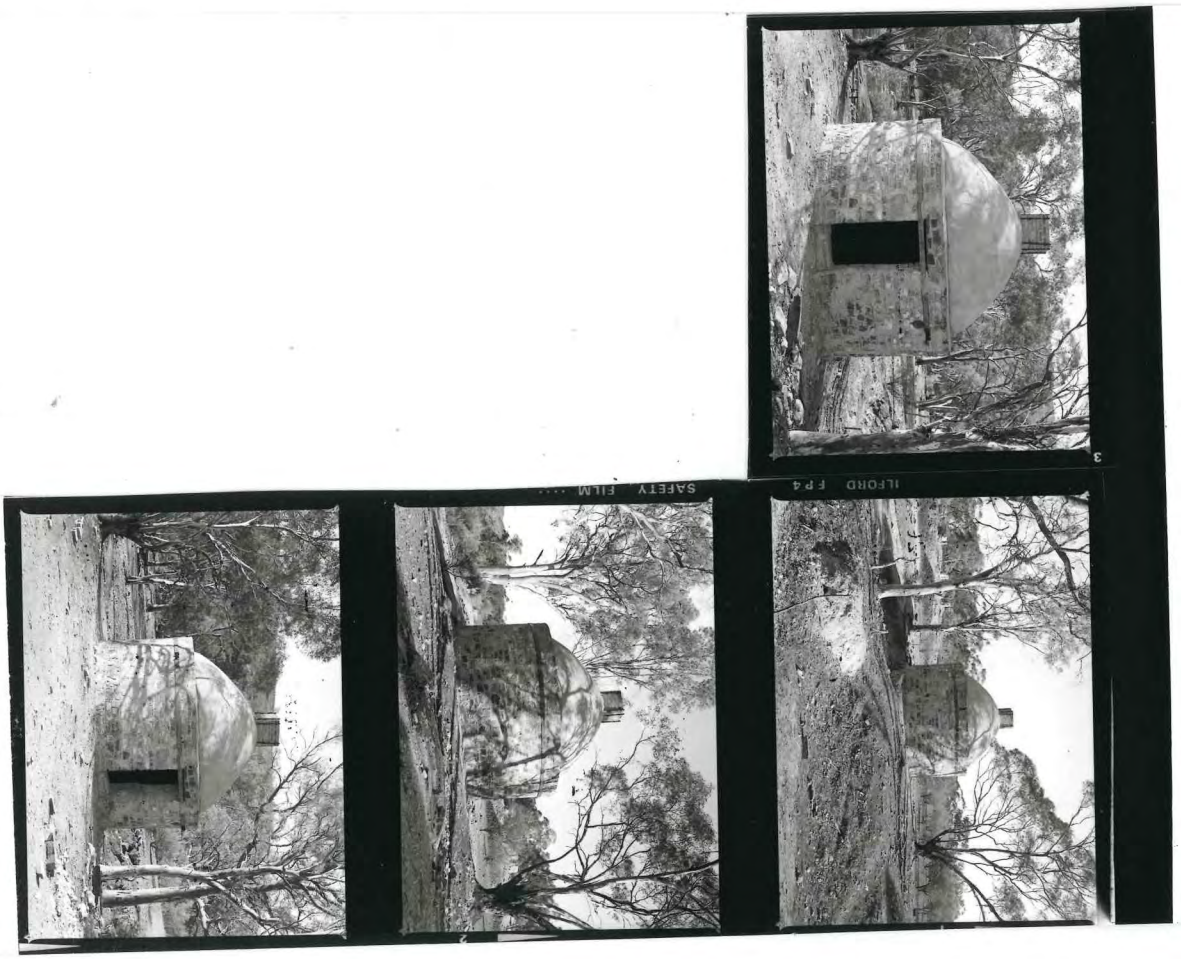
FILM No 76 5 SOUTH ELEVATION BRICK KILN 6736-10317 BOLLA BOLLANA 8-3-79